CITY OF LUFKIN
ENGINEERING DEPARTMENT
P.O. BOX 190
LUFKIN, TEXAS 75902-0190
PHONE: (936) 633-0414

STORM SEWER STANDARDS

JUNCTION BOX PLAN

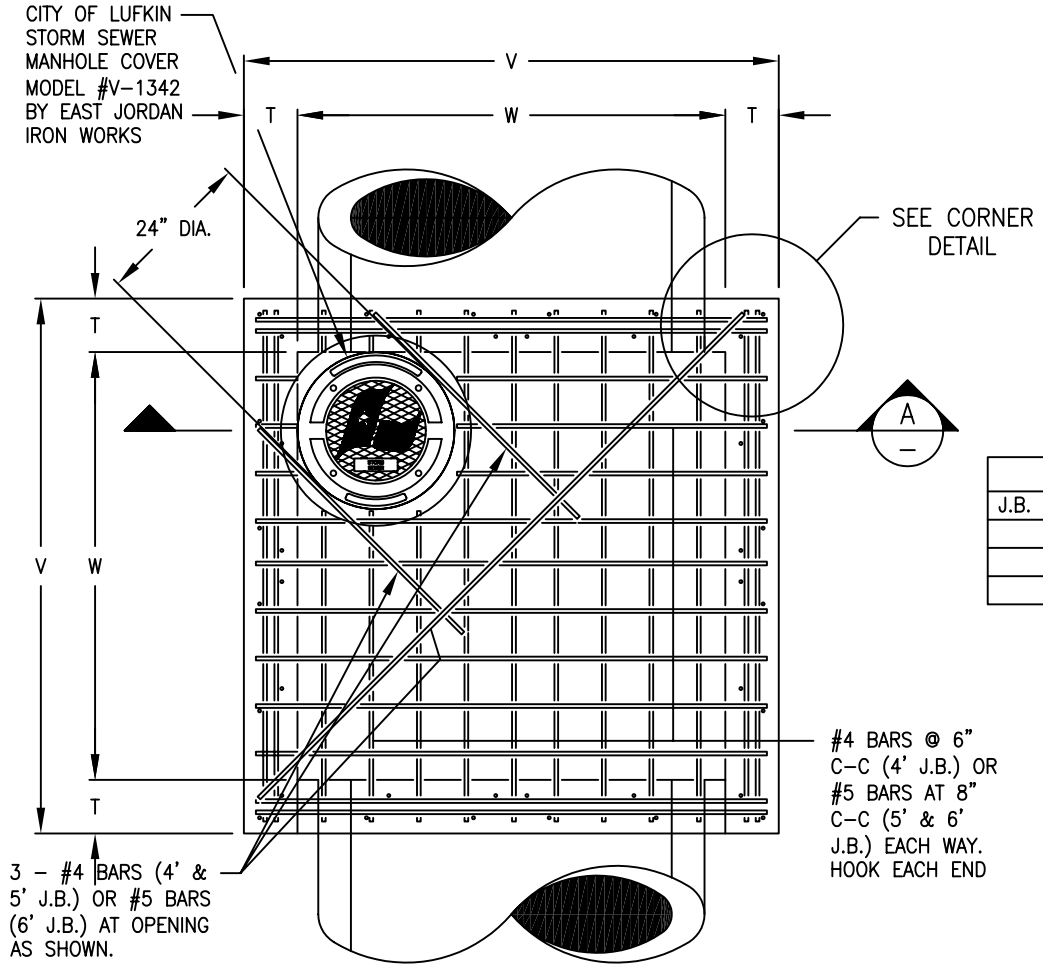

PLAN

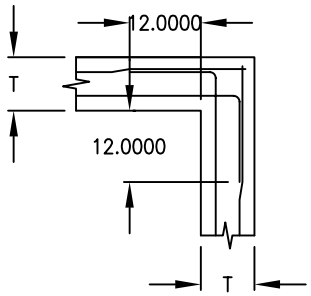

CORNER DETAIL

PLAN VIEW

TABLE OF DIMENSIONS						
J.B. SIZE (W)	V	T	E	F	G	H
4'	5'-4"	8"	6"	9"	6"	1'-3"
5'	6'-4"	8"	6"	12"	8"	1'-8"
6'	7'-6"	9"	9"	16"	10"	2'-2"

NOTES:

1. SLOPE INVERT OF MANHOLE AS INDICATED ON PLAN-PROFILE SHEET.
2. LAYERS OF REINFORCING STEEL NEAREST THE INTERIOR AND EXTERIOR SURFACE SHALL HAVE A COVER OF 2" TO THE CENTER OF BARS, UNLESS OTHERWISE NOTED.
3. CONCRETE SHALL BE CLASS "A".

10-JBOX.Dwg

10

10-13-03